DirectHome MEDICAL

Presented With Compliments From
www.DirectHomeMedical.com

RESPIRONICS

# REMstar**Pro**

**M** SERIES

## **USER** MANUAL

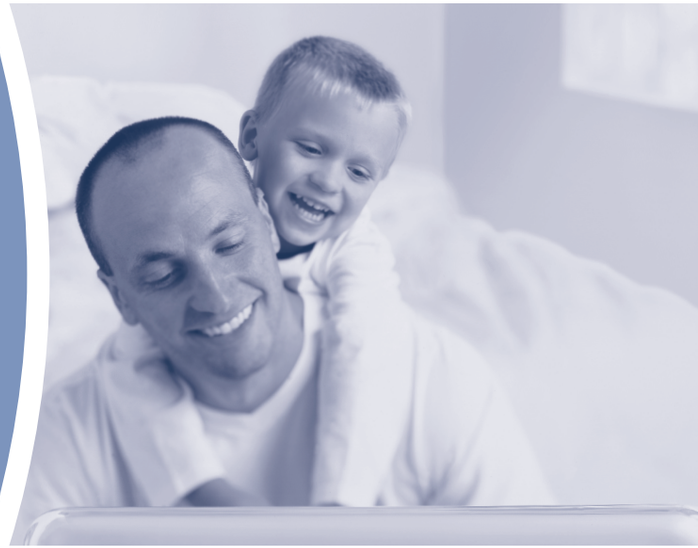

RESPIRONICS®
1001 Murry Ridge Lane
Murrysville, Pennsylvania
15668-8550 USA

RESPIRONICS®
Deutschland
Gewerbestrasse 17
82211 Herrsching Germany

CE 0123

www.respironics.com

1016444
JH 2/14/06

C-Flex™
the difference is real™

**IMPORTANT!** **Fill in the information below when you receive the REMstar® Pro M Series system.**

Serial No.: _____ (located on the bottom of the device)

System Prescribed for: _____

Date of Purchase or Rental: _____

Pressure Setting: _____ cm $H_2O$

Mask Type: _____

Mask Size: _____

If you have any questions concerning the system, contact:

- Home Care Company: _____

  Telephone Number: _____
- Health Care Professional: _____

  Telephone Number: _____
- Respironics, Inc.
  1001 Murry Ridge Lane
  Murrysville, Pennsylvania
  15668-8550 USA
  Customer Service
  Telephone Number: 1-724-387-4000

The REMstar® Pro M Series with C-Flex™ system is covered by one or more of the following patents: 5,148,802; 5,313,937; 5,433,193; 5,632,269; 5,803,065; 6,029,664; 6,305,374; 6,539,940, 5,535,738; 5,794,615; 6,105,575; 6,609,517; 6,629,527; 6,622,724; 6,564,797; 6,427,689, and 6,932,084. Other patents pending. REMstar, Whisper Swivel, Encore Pro, and Encore Pro SmartCard are trademarks of Respironics, Inc. NOTE: The C-Flex mark is used under license.
© 2006 Respironics, Inc. All rights reserved.

reply_card2.pdf 9/19/05 11:22:20 AM

# RESPIRONICS® REMstar® **M** Series **Registration**

Please complete the following or register online at: **www.mseries.respironics.com**

Product Identification Information
(Numbers located on the bottom of the device)

Model #: _____

Serial #: _____

Name _____

Address _____

City _____ State _____ Zip _____

Phone (_____) _____

E-mail _____

Where did you first hear about your M Series device?

☐ Homecare Provider ☐ Sleep Lab ☐ Internet/Website ☐ Tradeshow ☐ Friend/Colleague

☐ Other (please specify) _____

Would you like to receive information regarding new products from Respironics?

☐ Yes ☐ No

If Yes, Preferred Method?

☐ Direct Mail ☐ Phone ☐ Email

reply_card1.pdf 9/19/05 10:52:10 AM

NO POSTAGE
NECESSARY
IF MAILED
IN THE
UNITED STATES

# BUSINESS REPLY MAIL

FIRST-CLASS MAIL PERMIT NO. 231 GRAND RAPIDS MN

POSTAGE WILL BE PAID BY ADDRESSEE

RESPIRONICS®
**PO BOX 7014**
**GRAND RAPIDS MN 55744-8029**

An application to join the American Sleep Apnea Association should be attached here.
If it is not, you can contact the American Sleep Apnea Association at 1-202-293-3650.

**Name** _____ **Phone No. (  )** _____

**Address** _____ **City** _____ **State** _____ **Zip** _____

**Please check: _____$1000 _____$500 _____$250 _____$100 _____$50 _____$25 annual membership***

All memberships include a one year subscription to the newsletter. Membership and contributions are deductible for income tax purposes within IRS rules. ***Membership includes a free medical alert necklace or bracelet.***

**_____I would like to become a member of the ASAA.**

Please send me a free medical alert _____bracelet or _____necklace.

**_____I am undecided, but please send me a free copy of the newsletter.**

**_____I would like to know if there is an A.W.A.K.E. group near me.**

**PLEASE SEND TO:**

**American Sleep Apnea Association**
**1424 K Street NW, Suite 302, Washington D.C. 20005**

AMERICAN SLEEP APNEA ASSOCIATION

Respironics, Inc. provided a grant to and is recognized as a founding sponsor of the American Sleep Apnea Association. As a non-profit organization, the American Sleep Apnea Association does not endorse or recommend any company or product.

*For addresses outside the United States, the minimum contribution is U.S. $50.00.

# Join the American Sleep Apnea Association

As a member of the American Sleep Apnea Association, you will receive a newsletter, WAKE-UP CALL, six times each year. This newsletter will inform you about the latest in medical advances, new technology, human interest stories of individual accomplishment, home care tips, and legislative affairs. Also, you will receive a medical alert identification bracelet.

You are also invited to participate in the A.W.A.K.E. (Alert, Well And Keeping Energetic) Network, which is a nationwide system of local mutual help/support groups. A.W.A.K.E. meetings provide the opportunity to share information and support with others who have been affected by sleep apnea.

AMERICAN SLEEP APNEA ASSOCIATION

## G O A L S

To reduce disability and death from Sleep Apnea and other breathing disorders during sleep.

To improve the clinical care of Sleep Apnea by educating the public and medical profession about the disorder.

To provide Sleep Apnea sufferers with information about new advances in the treatment of Sleep Apnea.

To establish and nurture mutual help/support groups for apnea sufferers and their families.

To raise money for and to sponsor research on the causes and treatment of Sleep Apnea.

# Table of Contents


Chapter 1: Introduction ..... 1-1
1.1 System Contents ..... 1-1
1.2 Intended Use ..... 1-2
1.3 Warnings, Cautions, and Contraindications ..... 1-2
1.3.1 Warnings ..... 1-2
1.3.2 Cautions ..... 1-4
1.3.3 Contraindications ..... 1-4
1.4 System Overview ..... 1-5
1.4.1 Breathing Circuit Overview ..... 1-7
1.5 Glossary ..... 1-8
1.6 Symbol Key ..... 1-9
1.7 How to Contact Respironics ..... 1-10
Chapter 2: Device Controls and Displays ..... 2-1
2.1 Controls and Displays ..... 2-1
2.1.1 Control Panel Inactivity ..... 2-3
2.2 Rear Panel ..... 2-3
Chapter 3: Setup ..... 3-1
3.1 Installing the Air Filters ..... 3-1
3.2 Where to Place the Device ..... 3-2
3.3 Connecting the Breathing Circuit ..... 3-2
3.4 Supplying Power to the Device ..... 3-5
3.4.1 Using AC Power ..... 3-5
3.4.2 Using DC Power ..... 3-6
3.5 Complete Assembly Example ..... 3-7
Chapter 4: Device Operation ..... 4-1
4.2 Using the Ramp and C-Flex Features ..... 4-3
4.2.1 Ramp Feature ..... 4-3
4.2.2 C-Flex Comfort Feature ..... 4-4
4.2.2.1 C-Flex Enabled ..... 4-4
4.2.2.2 C-Flex Disabled ..... 4-4

4.3 Changing the Device Settings ..... 4-5
4.3.1 Navigating the Display Screens ..... 4-6
4.3.1.1 Viewing Data on the Patient Data Screens ..... 4-6
4.3.1.2 Viewing and Modifying Patient Setup Screens ..... 4-8
4.4 Completing the FOSQ Questionnaire ..... 4-11
4.5 Patient Reminder Screen ..... 4-12
Chapter 5: Device Alerts and Troubleshooting ..... 5-1
5.1 Device Alerts ..... 5-1
5.2 Troubleshooting ..... 5-4
Chapter 6: Accessories ..... 6-1
6.1 Adding a Humidifier ..... 6-1
6.2 Using the SmartCard ..... 6-2
6.3 Adding Supplemental Oxygen ..... 6-2
Chapter 7: Cleaning and Maintenance ..... 7-1
7.1 Cleaning the Device ..... 7-1
7.2 Cleaning or Replacing the Filters ..... 7-1
7.3 Cleaning the Tubing ..... 7-3
7.4 Service ..... 7-3
7.5 Traveling with the System ..... 7-4
7.5.1 International Travel ..... 7-4
Chapter 8: Specifications ..... 8-1
Appendix A: EMC Information ..... A-1

# Chapter 1: Introduction

This chapter provides information on:

- REMstar Pro M Series system contents
- Intended Use
- Warnings, cautions, and contraindications
- System overview
- Glossary and symbol key
- How to contact Respironics

## 1.1 System Contents

Your REMstar Pro M Series system includes the following items:

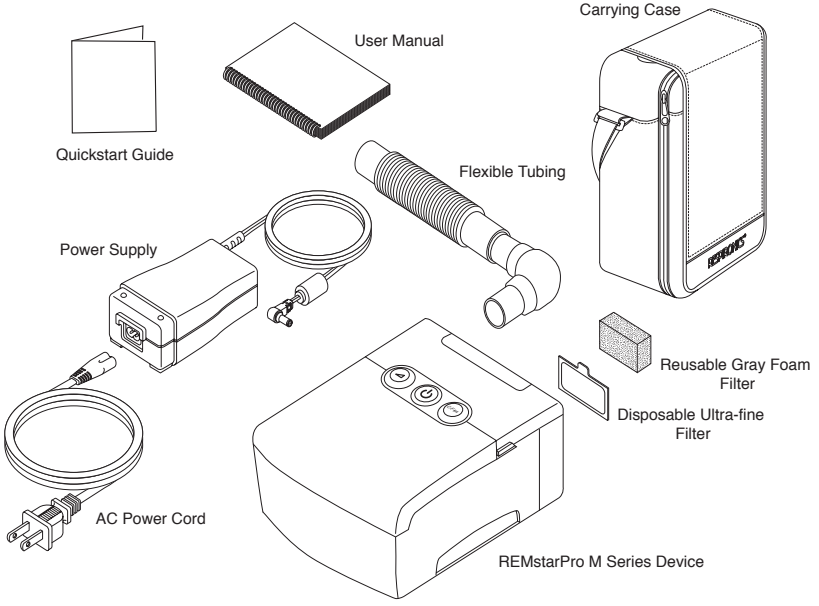


**Figure 1–1 System Contents**

***Note:*** *If your system includes a humidifier, you will receive additional items with your package. See the instructions included with your humidifier for more information.*

***Note:*** *If any of the above items are missing, contact your home care provider.*

## 1.2 Intended Use

The Respironics REMstar Pro M Series system is a CPAP (Continuous Positive Airway Pressure) device designed for the treatment of Obstructive Sleep Apnea only in spontaneously breathing patients weighing >66 lbs (30 kg).

The device is to be used only on the instruction of a licensed physician. Your home care provider will make the correct pressure settings according to your health care professional's prescription.

Several accessories are available to make your OSA treatment with the REMstar Pro M Series system as convenient and comfortable as possible. To ensure that you receive the safe, effective therapy prescribed for you, use only Respironics accessories.

## 1.3 Warnings, Cautions, and Contraindications

***Caution:*** *U.S. federal law restricts this device to sale by or on the order of a physician.*

### 1.3.1 Warnings

*A warning indicates the possibility of injury to the user or the operator.*

- This manual serves as a reference. The instructions in this manual are not intended to supersede the health care professional's instructions regarding the use of the device.
- The operator should read and understand this entire manual before using the device.
- This device is not intended for life support.
- The device should be used only with masks and connectors recommended by Respironics or with those recommended by the health care professional or respiratory therapist. A mask should not be used unless the device is turned on and operating properly. The exhalation port(s) associated with the mask should never be blocked.
  **Explanation of the Warning:** The device is intended to be used with special masks or connectors that have exhalation ports to allow continuous flow of air out of the mask. When the device is turned on and functioning properly, new air from the device flushes the exhaled air out through the mask exhalation port. However, when the device is not operating, enough fresh air will not be provided through the mask, and exhaled air may be rebreathed. Rebreathing of exhaled air for longer than several minutes can in some circumstances lead to suffocation.
- If oxygen is used with the device, the oxygen flow must be turned off when the device is not in use.
  **Explanation of the Warning:** When the device is not in operation and the oxygen flow is left on, oxygen delivered into the tubing may accumulate within the device's enclosure. Oxygen accumulated in the device enclosure will create a risk of fire.

- Oxygen supports combustion. Oxygen should not be used while smoking or in the presence of an open flame.
- When using oxygen with this system, a Respironics Pressure Valve (Part Number 302418) must be placed in-line with the patient circuit. Failure to use the pressure valve could result in a fire hazard.
- Do not use the device in the presence of a flammable anaesthetic mixture in combination with oxygen or air, or in the presence of nitrous oxide.
- Do not use this device if the room temperature is warmer than 95° F (35° C). If the device is used at room temperatures warmer than 95° F (35° C), the temperature of the airflow may exceed 106° F (41° C). This could cause irritation or injury to your airway.
- Do not operate the device in direct sunlight or near a heating appliance because these conditions can increase the temperature of the air coming out of the device.
- Contact your health care professional if symptoms of sleep apnea recur.
- If you notice any unexplained changes in the performance of this device, if it is making unusual or harsh sounds, if the device or the power supply are dropped or mishandled, if water is spilled into the enclosure, or if the enclosure is broken, discontinue use and contact your home care provider.
- Repairs and adjustments must be performed by Respironics-authorized service personnel only. Unauthorized service could cause injury, invalidate the warranty, or result in costly damage.
- Periodically inspect electrical cords, cables, and the power supply for damage or signs of wear. Discontinue use and replace if damaged.
- To avoid electric shock, unplug the device before cleaning it. DO NOT immerse the device in any fluids.
- Pins of connectors identified with the ESD warning symbol ( )should not be touched. Connections should not be made to these connectors unless ESD precautionary procedures are used. Precautionary procedures include methods to prevent build-up of electrostatic discharge (e.g., air conditioning, humidification, conductive floor coverings, non-synthetic clothing), discharging one's body to the frame of the equipment or system or to earth or a large metal object, and bonding oneself by means of a wrist strap to the equipment or system or to earth.

### 1.3.2 Cautions

*A Caution indicates the possibility of damage to the device.*

- The device may only be operated at temperatures between 41° F (5° C) and 95° F (35° C).
- If this device has been exposed to either very hot or very cold temperatures, allow it to adjust to room temperature before starting therapy. Condensation may damage the device.
- Do not immerse the device or allow any liquid to enter the enclosure or the inlet filter.
- A properly installed, undamaged reusable foam inlet filter is required for proper operation.
- Tobacco smoke may cause tar build-up within the device, which may result in the device malfunctioning.

***Note:*** *Additional warnings, cautions, and notes are located throughout this manual.*

### 1.3.3 Contraindications

When assessing the relative risks and benefits of using this equipment, the clinician should understand that this device can deliver pressures up to 20 cm $H_2O$. In the event of certain fault conditions, a maximum pressure of 30 cm $H_2O$ is possible. Studies have shown that the following pre-existing conditions may contraindicate the use of CPAP therapy for some patients:

- Bullous Lung Disease
- Pathologically Low Blood Pressure
- Bypassed Upper Airway
- Pneumothorax
- Pneumocephalus has been reported in a patient using nasal Continuous Positive Airway Pressure. Caution should be used when prescribing CPAP for susceptible patients such as those with: cerebral spinal fluid (CSF) leaks, abnormalities of the cribriform plate, prior history of head trauma, and/or pneumocephalus. (Chest 1989; 96:1425-1426)

The use of positive airway pressure therapy may be temporarily contraindicated if you exhibit signs of a sinus or middle ear infection. Not for use with patients whose upper airways are bypassed. Contact your physician if you have any questions concerning your therapy.

## 1.4 System Overview

The REMstar Pro M Series device, shown in Figure 1–2, is a sleep apnea system that delivers Continuous Positive Airway Pressure (CPAP). CPAP maintains a constant level of pressure throughout the breathing cycle.

When prescribed for you, the device provides several special features to help make your therapy more comfortable. The ramp function allows you to lower the pressure when you are trying to fall asleep. The air pressure will gradually increase until your prescription pressure is reached. You also have the option of not using the ramp feature at all.

Additionally, the C-Flex comfort feature provides you with pressure relief during the expiratory phase of breathing.

Several accessories are also available for use with your REMstar Pro M Series device. Contact your home care provider to purchase any accessories not included with your system.

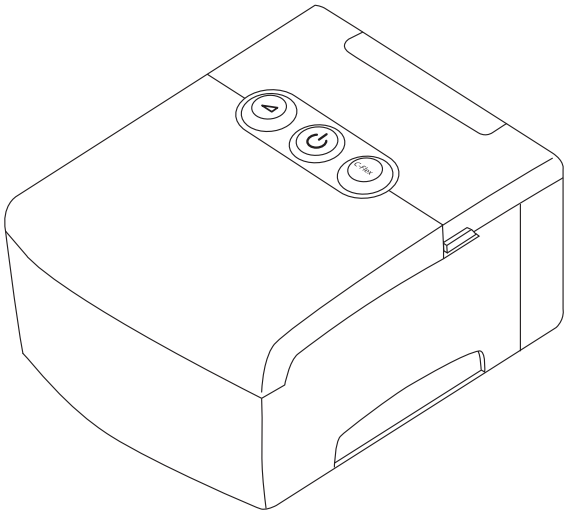

**Figure 1–2 REMstar Pro M Series Device**

Figure 1–3 illustrates many of the device features, described in the table below.

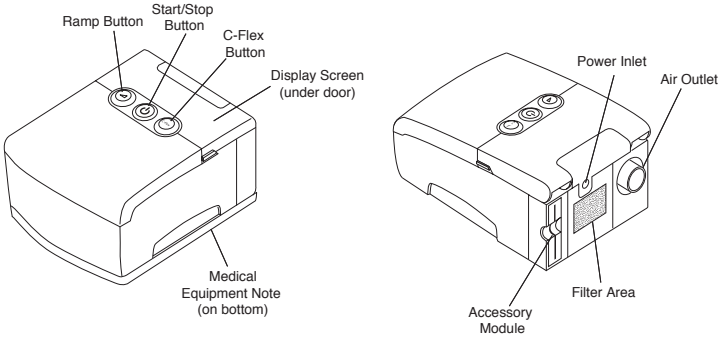


**FIGURE 1–3 REMSTAR PRO M SERIES SYSTEM OVERVIEW**

| DEVICE FEATURE | DESCRIPTION |
|---|---|
| Accessory Module | If applicable, insert the optional accessory card here. |
| Air Outlet | Connect the flexible tubing here. |
| C-Flex Button | This button allows you to change the C-Flex comfort setting, if C-Flex is prescribed for you. See Chapter 4 for more information about C-Flex. |
| Display Screen | Shows therapy settings, patient data, instructions, and error messages. |
| Filter Area | A reusable, gray foam filter must be placed in the filter area to screen out normal household dust and pollens. An optional, white ultra-fine filter can also be used for more complete filtration of very fine particles. |
| Medical Equipment Note | For ease at airport security stations, there is a note on the bottom of the device stating that it is medical equipment. It may help if you also take this manual with you when you travel. |
| Power Inlet | Connect the power cord here. |
| Ramp Button | This button starts or restarts the ramp cycle. |
| Start/Stop Button | This button starts or stops the airflow. |

### 1.4.1 Breathing Circuit Overview

The patient breathing circuit, shown in Figure 1–4, consists of the following:

- Circuit tubing to deliver air from the device to your interface (e.g., mask)
- A mask or other patient interface device to deliver the prescribed pressure to your nose or nose and mouth, depending on which interface has been prescribed for you
- An exhalation device to vent exhaled air from the circuit

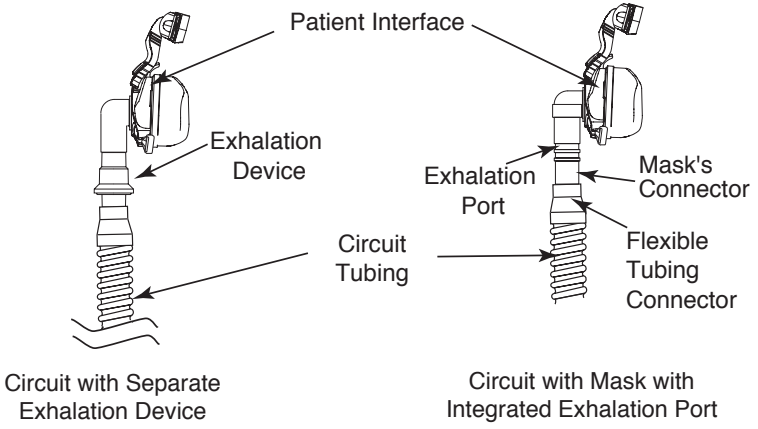


**Figure 1–4 Typical Breathing Circuits**

***Note:*** *The exhalation port may be part of the interface or may be part of a separate exhalation device, but is required to minimize the potential for $CO_2$ rebreathing.*

## 1.5 Glossary

The following terms and acronyms appear throughout this manual:

| Term/Acronym | Definition |
|---|---|
| Active State | The state of the device when power is applied, the airflow is on, and the device is providing therapy. |
| Apnea | A condition marked by the cessation of spontaneous breathing. |
| Auto-Off | When this feature is enabled, the device automatically discontinues therapy whenever the mask is removed. |
| Auto-On | With this feature, the device automatically initiates therapy when you begin breathing on the device. This feature is always enabled. |
| BPM | Breaths Per Minute |
| C-Flex | A therapy feature that provides pressure relief during exhalation, if enabled by your home care provider. |
| CPAP | Continuous Positive Airway Pressure |
| FOSQ | Functional Outcomes of Sleep Questionnaire – A "quality of life" questionnaire designed specifically for people with sleep disorders. The results allow health care professionals to assess how CPAP therapy has improved the quality of their patients' lives. |
| LPM | Liters Per Minute |
| OSA | Obstructive Sleep Apnea |
| Patient Data Menu | The display mode in which you can view certain stored information, such as therapy usage hours. |
| Patient Setup Menu | The display mode in which you can change patient-adjustable device settings, such as the ramp starting pressure. |
| Ramp | A feature that may increase patient comfort when therapy is started. The ramp feature reduces pressure and then gradually increases the pressure to the prescription setting so you can fall asleep more comfortably. |
| Safe State | The state in which the device does not provide therapy. The device enters this state if an error is detected. |
| Standby State | The state of the device when power is applied but the airflow is turned off. |

## 1.6 Symbol Key

The following symbols appear on the device and power supply:

| Symbol | Definition |
|---|---|
| | Consult accompanying instructions for use. |
| | DC Power |
| | Type BF Applied Part |
| | Class II (Double Insulated) |
| IPX1 | Drip Proof Equipment |
| | Electrostatic Discharge |
| | European Declaration of Conformity |
| | Canadian/US Certification |
| | Notified Body Approval for Standards Compliance |
| | TUV Safety Standard Compliance |
| | UL Recognized for Canada and the United States |
| | No User Serviceable Parts |

## 1.7 How to Contact Respironics

To have your device serviced, contact your home care provider. If you need to contact Respironics directly, call the Respironics Customer Service department at 1-800-345-6443 or 1-724-387-4000. You can also use the following address:

RESPIRONICS®
1001 Murry Ridge Lane
Murrysville, Pennsylvania
15668-8550 USA

Visit Respironics web site at: www.respironics.com

# Chapter 2: Device Controls and Displays

This chapter describes the device's control buttons and displays, patient circuit connections, and rear panel connections.

## 2.1 Controls and Displays

Figure 2–1 shows the three primary control buttons on the REMstar Pro M Series device.

**Figure 2–1 Primary Control Buttons**

These buttons are described below.

| Button | Description |
|---|---|
| | Ramp – When the airflow is on, this button allows you to activate or restart the ramp function. Ramp lowers the airflow pressure and then gradually increases it, allowing you to fall asleep more easily. |
| | Start/Stop – This button starts the device's airflow and places the device in the Active state, or stops the airflow, and places the device in Standby. You can also press this button to exit any setting screen. |
| **C-Flex** | C-Flex – This button adjusts the C-Flex comfort setting. |

If you do not want to modify the settings that your home care provider has set for you, you only need these three buttons to start and stop therapy and do not need to use the display buttons located under the device cover door.

Figure 2–2 shows the device display and navigation buttons that are under the cover door.

**Figure 2–2 Display Buttons**

The display buttons are described below:

| Button | Description |
|---|---|
| ◀ | Allows you to access the Data screens. Also allows you to navigate to the previous screen when in the Data or Setup menu. |
| ▶ | Allows you to access the Data screens. Also allows you to navigate to the next screen when in the Data or Setup menu. |
| − | Allows you to enter the FOSQ screens, and also allows you to decrease the settings on the setup screens. |
| + | Allows you to enter the Setup screens. Also allows you to increase the settings on the setup screens. |

The device's display screen shows the set pressure, patient data, instructions, and error messages. See Chapter 4 for instructions on navigating the display screens.

Figure 2–3 provides a view of the entire device control panel, with the cover door open.

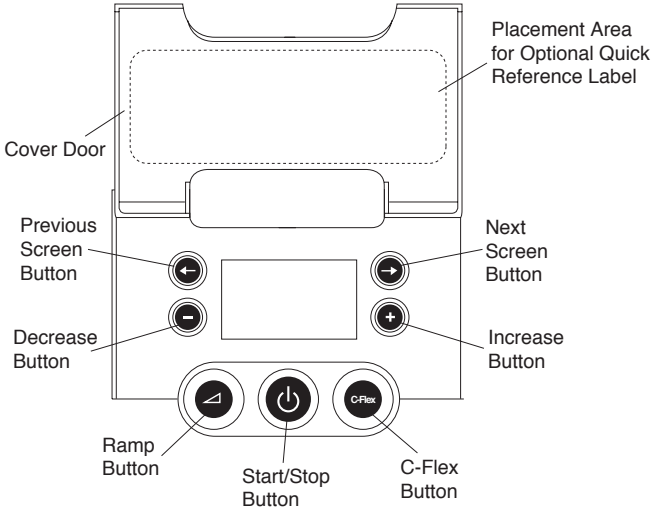


**Figure 2–3 Device Control Panel**

### 2.1.1 Control Panel Inactivity

Some screens have time-out periods. The screen's timer starts when the screen is initially displayed and is restarted whenever a button is pressed. The screen times out after one minute if there is no activity and returns to the Standby screen.

## 2.2 Rear Panel

Figure 2–4 shows the REMstar Pro M Series device's rear panel (without a humidifier).

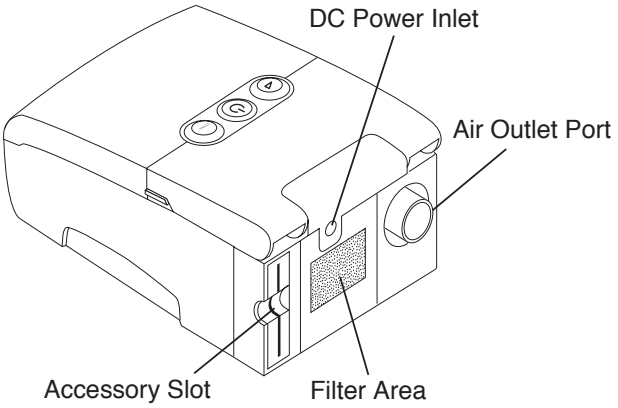


**Figure 2–4 REMstar Pro M Series Rear Panel**

The rear panel contains the following:

- An accessory slot for optional accessories such as the SmartCard or modem (see Chapter 6, *Accessories*, for more information).
- A filter area where the filter(s) supplied with your device should be inserted.
- A DC power inlet where the power cord is connected (see Chapter 3, *Setup*, for complete information on supplying power to the device).
- The air outlet port where the breathing circuit's flexible tubing is attached.

# Chapter 3: Setup

This chapter provides instructions on how to:

- Install the air filters
- Position the device
- Connect the breathing circuit
- Supply power to the device

## 3.1 Installing the Air Filters

***Caution:*** *A properly installed, undamaged foam filter is required for proper operation.*

The device uses a gray foam filter that is washable and reusable, and an optional white ultra-fine filter that is disposable. The reusable filter screens out normal household dust and pollens, while the optional ultra-fine filter provides more complete filtration of very fine particles. The gray reusable filter must be in place at all times when the device is operating. The ultra-fine filter is recommended for people who are sensitive to tobacco smoke or other small particles.

Two reusable gray foam filters and one disposable ultra-fine filter are supplied with the device.

If your filters are not already installed when you receive your device, you must at least install the reusable gray foam filter before using the device.

To install the filter(s):

1. If you are using the white disposable ultra-fine filter, insert it into the filter area first, mesh-side facing in, towards the device.
2. Insert the gray foam filter into the filter area as shown in Figure 3–1.

***Note:*** *If you are not using the white disposable filter, simply insert the gray foam filter into the filter area.*

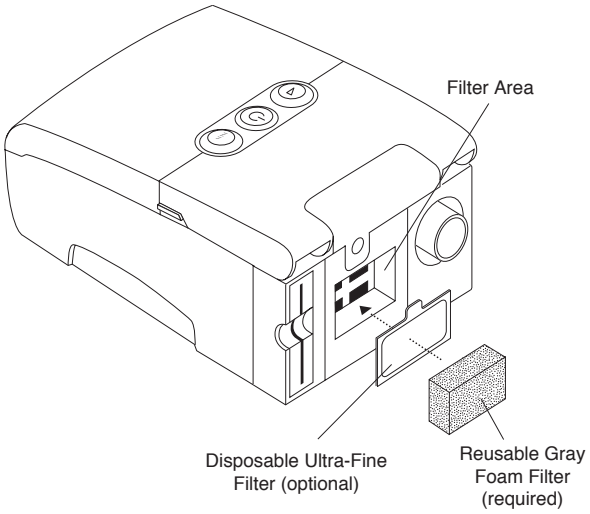


**FIGURE 3–1 INSTALLING THE AIR FILTER**

***Note:*** *See Chapter 7, Cleaning and Maintenance, for information on how to clean or replace the air filters.*

## 3.2 WHERE TO PLACE THE DEVICE

Place the device on a firm, flat surface somewhere within easy reach of where you will use it. Make sure the filter area on the back of the device is not blocked by bedding, curtains, or other items. Air must flow freely around the device for the system to work properly. Make sure the device is away from any heating or cooling equipment (e.g., forced air vents, radiators, air conditioners).

## 3.3 CONNECTING THE BREATHING CIRCUIT

To use the system, you will need the following accessories in order to assemble the recommended circuit:

- Respironics interface (e.g, nasal mask) with integrated exhalation port (or Respironics interface with a separate exhalation device such as the Whisper Swivel® II)
- Respironics 6 ft. (1.83 m) flexible tubing (with optional swivel)
- Respironics headgear (for the patient interface)

***Warning:*** *If the device is used by multiple persons (e.g., rental devices), a low-resistance, main flow bacteria filter should be installed in-line between the device and the circuit tubing to prevent contamination.*

To connect your breathing circuit to the device, complete the following steps:

1. Connect the flexible tubing to the air outlet on the back of the device, as shown in Figure 3–2. You can use the optional, detachable swivel that is provided with your device and already attached to the tubing (shown in Figure 3–2), or you can remove the swivel and connect the tubing directly to the air outlet.

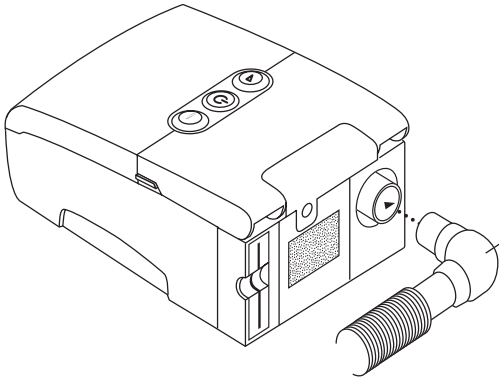

**FIGURE 3–2 CONNECTING THE FLEXIBLE TUBING**

***Note:*** *If required, connect a bacteria filter to the device air outlet, and then connect the flexible tubing to the outlet of the bacteria filter.*

2. Connect the tubing to the mask:
   a. If you are using a mask with a built-in exhalation port, connect the mask's connector to the flexible tubing, as shown in Figure 3–3.

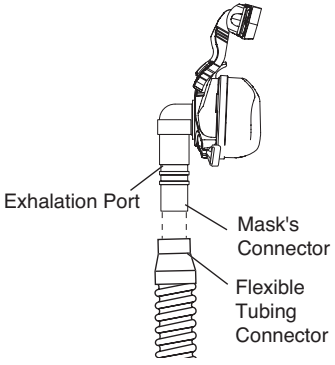


**FIGURE 3–3 CONNECTING A MASK WITH BUILT-IN EXHALATION PORT**

b. If you are using a mask with a separate exhalation device, connect the open end of the flexible tubing to the exhalation device as shown in Figure 3–4. Position the exhalation device so that the vented air is blowing away from your face. Connect the mask's connector to the exhalation device.

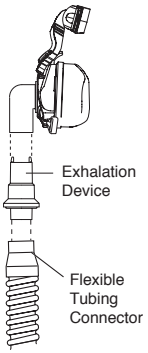


**FIGURE 3–4 CONNECTING A MASK WITH A SEPARATE EXHALATION DEVICE**

***Warning:*** *The exhalation device (e.g., Whisper Swivel II) or exhalation port (on masks with an integrated exhalation port) is designed to exhaust $CO_2$ from the patient circuit. Do not block or seal the ports on the exhalation device.*

***Warning:*** *If you are using a full face mask (i.e., a mask covering both your mouth and your nose), the mask must be equipped with a safety (entrainment) valve.*

3. Attach the headgear to the mask. See the instructions that came with your headgear.

## 3.4 Supplying Power to the Device

You can power the device using AC or DC power.

***Caution:*** *If this device has been exposed to either very hot or very cold temperatures, allow it to adjust to room temperature before beginning the following setup procedures.*

***Warning:*** *Route the wires to avoid tripping.*

***Warning:*** *This device is activated when the power cord is connected. Pressing the ⏻ button turns the airflow on or off.*

***Important!*** *If you are using your device with a humidifier, refer to the Quickstart Guide included with your device or the instructions included with your humidifier for details on how to power the device and humidifier.*

### 3.4.1 Using AC Power

Complete the following steps to operate the device using AC power.

1. Plug the socket end of the AC power cord into the power supply, as shown in Figure 3–5.

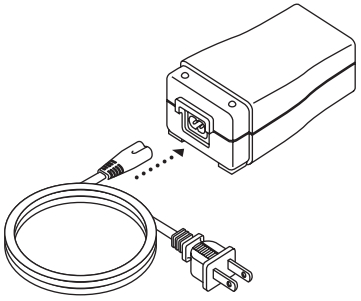

**Figure 3–5 Connecting the Power Cord to the Power Supply**

2. Plug the pronged end of the AC power cord into an electrical outlet that is not controlled by a wall switch.

3. Plug the power supply cord's connector into the power inlet on the back of the device, as shown in Figure 3–6.

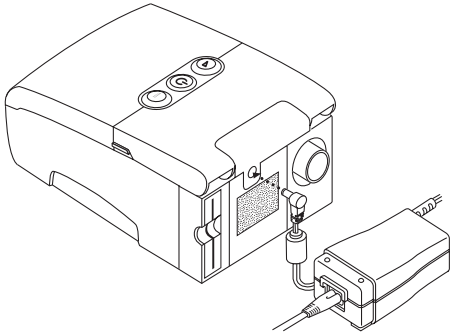

**FIGURE 3–6 CONNECTING THE POWER SUPPLY CORD TO THE DEVICE**

4. Ensure that all connections are secure.

***Important!*** *To remove AC power, disconnect the power supply cord from the electrical outlet.*

***Warning:*** *Inspect the power cord often for any signs of damage. Replace a damaged power cord immediately.*

### 3.4.2 USING DC POWER

The Respironics DC Power Cord (Reorder Number 1001956) can be used to operate this device in a stationary recreational vehicle, boat, or motor home. The Respironics DC Battery Adapter Cable (Reorder Number 532209), when used with the DC Power Cord, enables the device to be operated from a 12 VDC free-standing battery.

***Caution:*** *When DC power is obtained from a vehicle battery, the device should not be used while the vehicle's engine is running. Damage to the vehicle or the device may occur.*

***Caution:*** *Only use a Respironics DC Power Cord and Battery Adapter Cable. Use of any other system may cause damage to the device or vehicle.*

Refer to the instructions supplied with the DC Power Cord and adapter cable for information on how to operate the device using DC power.

## 3.5 Complete Assembly Example

Figure 3–7 shows an example of how a complete assembly will look, with breathing circuit connected and power applied to the device.

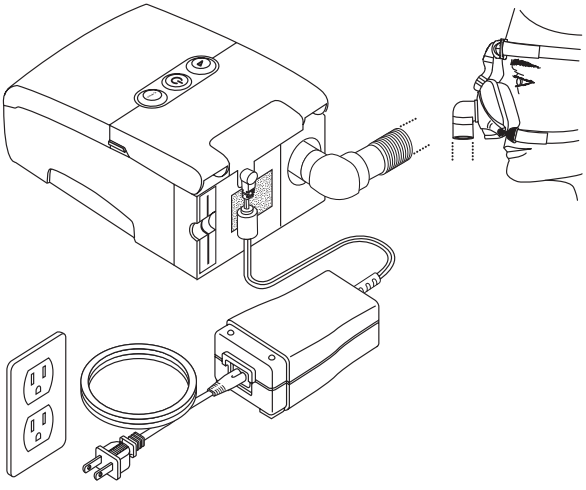

**Figure 3–7 Final Assembly Example (Shown with Optional Accessory Module)**

Figure 3–8 shows an example of how you should route your tubing and situate your device on your nightstand for the best setup possible. This will help prevent the device from falling off your nightstand or table.

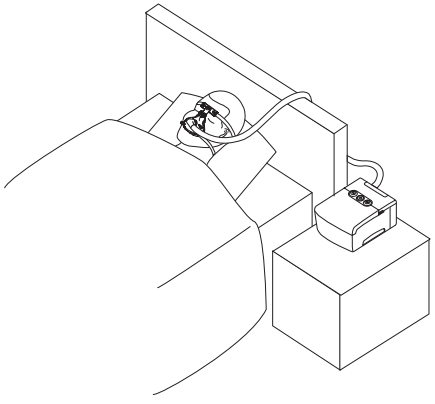

**Figure 3–8 Recommended Device and Tubing Placement**

# CHAPTER 4: DEVICE OPERATION

This chapter explains how to start the device and change the settings.

## 4.1 STARTING THE DEVICE

1. Plug the device in to an AC or DC power source. The three primary buttons light up and the Software Version screen momentarily appears, shown in Figure 4–1.

**FIGURE 4–1 SOFTWARE VERSION SCREEN**

***Note:*** *Version 1.0 shown in Figure 4–1 is an example. Your device may have a different software version installed.*

2. The next screen to appear is the Standby (or Inactive) screen, shown in Figure 4–2. You can access the FOSQ questionnaire or patient settings and data from this screen. See Section 4.3 for instructions on how to navigate the display screens.

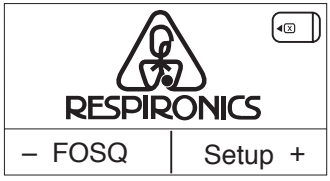


**FIGURE 4–2 STANDBY SCREEN**

***Note:*** *The FOSQ option will only appear on the Standby screen if a SmartCard is inserted in the device or if a modem is connected.*

3. Press the ⏻ button to turn on the airflow. The Active Display screen appears, shown in Figure 4–3.

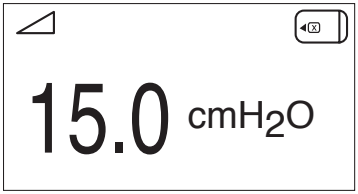


**FIGURE 4–3 ACTIVE DISPLAY (WITH SMARTCARD)**

The Active Display screen shows the set pressure.

Some symbols indicating when certain conditions are turned on or detected will also appear on the Active Display screen or on the Standby screen. These symbols are described below:

| SYMBOL | DESCRIPTION |
|---|---|
| | Ramp – You can initiate the ramp feature by pressing the Ramp button. The ramp symbol displays on the Active Display screen when the ramp function is active. |
| Mask Leak | Mask Leak Alert – This flashing text displays on the Active Display screen if the Mask Alert setting is enabled and the device detects an excessive mask leak. |
| Auto Off | Auto-Off – This flashing text displays on the Standby screen if the Auto-Off setting is enabled and the device detects a mask disconnect. |
| | SmartCard – This symbol displays if a SmartCard is inserted in the device. If the Smartcard is inserted incorrectly, the symbol will flash intermittently. |
| | Modem – This symbol displays if a modem is connected to the device. (Note: This symbol will vary in appearance depending on the type of modem being used.) |

4. Put on your mask assembly when the air starts to flow.
5. Make sure that no air is leaking from your mask into your eyes. If it is, adjust the mask and headgear until the air leak stops. See the instructions provided with your mask for more information.

***Note:*** *A small amount of mask leak is normal and acceptable. Correct large mask leaks or eye irritation from an air leak as soon as possible.*

6. If you are using the device while sleeping, try placing the tubing from the device over your headboard. This may reduce tension on the mask.

***Note:*** *If you are having trouble with your mask, refer to the instructions included with the mask.*

## 4.2 Using the Ramp and C-Flex Features

You can press the ⊿ (Ramp) button to activate the Ramp feature, or the C-Flex button to change the C-Flex setting, if your provider has enabled these features.

### 4.2.1 Ramp Feature

The device is equipped with an optional ramp feature that your home care provider can enable or disable. This feature reduces the air pressure when you are trying to fall asleep and then gradually increases (ramps) the pressure until your prescription setting is reached, allowing you to fall asleep more comfortably.

If ramp is enabled on your device, after you turn on the airflow, press the ⊿ button on the top of the device. You can use the Ramp button as often as you wish during the night.

***Note:*** *If the ramp feature is disabled, nothing will happen when you press the ⊿ button.*

### 4.2.2 C-Flex Comfort Feature

The C-Flex comfort feature allows you to adjust the level of air pressure relief that you feel when you exhale during therapy. Your home care provider can enable or disable this feature.

#### 4.2.2.1 C-Flex Enabled

When your provider enables C-Flex, a C-Flex level will already be set for you on the device. If this is not comfortable for you, you can increase or decrease the setting.

To change the C-Flex setting, press the C-Flex button. The screen shown in Figure 4–4 appears, with an arrow above the current C-Flex setting.

**Figure 4–4 C-Flex Setting Screen**

The setting of 1 provides a small amount of pressure relief, with higher numbers providing additional relief. To change the pressure relief, press the + or – buttons to increase or decrease the setting.

***Note:*** *You can also view and change the C-Flex setting by navigating to the C-Flex Setting screen from the Patient Setup menu (see Section 4.3).*

#### 4.2.2.2 C-Flex Disabled

If C-Flex has not been prescribed for you and your provider has disabled the C-Flex feature, the following screen appears when you press the C-Flex button, and you cannot enable or adjust the setting.

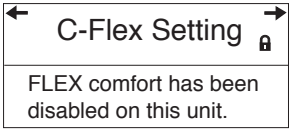


**Figure 4–5 C-Flex Disabled Screen**

## 4.3 Changing the Device Settings

You can view the set pressure on the Active Display screen, as well as the following information on the Patient Data screens:

- Therapy usage hours
- Number of sessions greater than 4 hours
- System leak (if enabled by your home care provider)
- Apnea/Hypopnea Index (if enabled by your home care provider)

Additionally, you can view and modify the following settings on the Patient Setup screens:

- C-Flex (if enabled by your home care provider)
- Ramp starting pressure (if enabled by your home care provider)
- Mask alert (enable/disable)
- Auto off (enable/disable)

### 4.3.1 Navigating the Display Screens

Use the → button to navigate to the next screen and the ← button to navigate to the previous screen.

Use the + and — buttons to adjust the settings on the Patient Setup screens.

#### 4.3.1.1 Viewing Data on the Patient Data Screens

Figure 4–6 shows how to navigate the Patient Data screens.

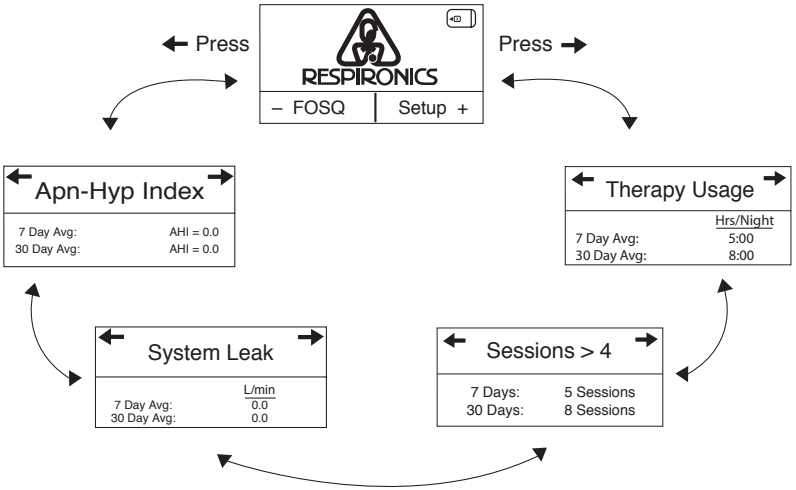


**Figure 4–6 Navigating the Patient Data Screens**

Press the → button to scroll forward through the data screens, or press the ← button to scroll through the screens in the reverse order.

The Patient Data screens are described below.

**1. Standby Screen**

The Standby screen appears when you first apply power to the device. You can access the Patient Data menu from this screen by pressing the → or ← buttons.

***Note:*** *You can access the Patient Setup screens by pressing the + button, and the FOSQ questionnaire by pressing the — button, as described later in this chapter.*

***Note:*** *The FOSQ option only appears if a SmartCard is inserted or a modem is connected to the device.*

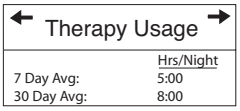


**2. Therapy Usage Screen**

This screen displays the number of hours that the device provided therapy, as 7-day and 30-day averages. The maximum value that can be displayed for both averages is 24 hours.

***Note:*** *This screen is only for reference. Your home care provider may periodically ask you for this information.*

**3. Sessions Greater than 4 Hours Screen**

This screen displays the number of device therapy sessions that exceeded 4 hours in 7-day and 30-day periods. The maximum value for the 7-day period is 35 sessions, while the maximum value for the 30-day period is 150 sessions.

***Note:*** *This screen is only for reference. Your home care provider may periodically ask you for this information.*

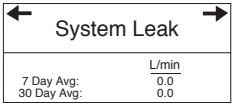


**4. System Leak Screen**

This screen displays a 7-day and 30-day average of the leak history for the device in liters per minute (LPM). System leak is a combination of intentional and unintentional air leak. Intentional leak is the expected leak at the exhalation port. Some leak is required to minimize $CO_2$ rebreathing. Unintentional leak occurs around the patient interface. If you see a large increase in the amount of leak indicated here, contact your home care provider for assistance.

***Note:*** *This screen only displays if your home care provider has enabled it. It is only for reference. Your home care provider may periodically ask you for this information.*

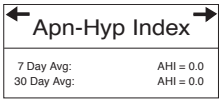


**5. Apnea/Hypopnea Index Screen**

This screen displays your Apnea/Hypopnea index (AHI) for the last 7 and 30 days.

***Note:*** *This screen only displays if your home care provider has enabled it. It is only for reference. Your home care provider may periodically ask you for this information.*

### 4.3.1.2 Viewing and Modifying Patient Setup Screens

Figure 4–7 shows how to navigate the Patient Setup screens.

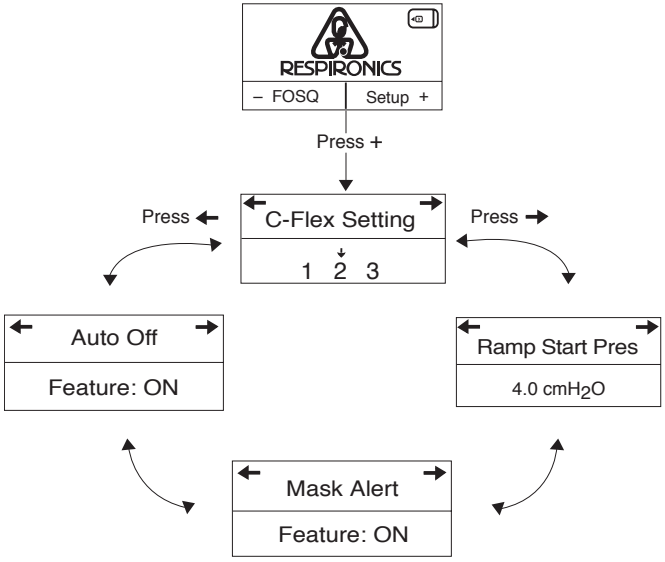


**Figure 4–7 Navigating the Patient Setup Screens**

The Patient Setup screens are described below.

**1. Standby Screen**

The Standby screen appears when you first apply power to the device. You can access the Patient Setup menu from this screen by pressing the + button. Once inside the Setup menu, press the → or ← buttons to cycle through the screens.

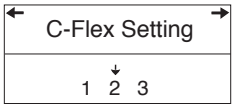


**2. C-Flex Setting Screen**

This screen displays the C-Flex level set by your home care provider. This setting allows you to adjust the level of air pressure relief that you feel when you exhale during therapy. Your home care provider will either enable or disable C-Flex.

– If C-Flex is enabled and the setting is not comfortable for you, you can increase or decrease the setting by pressing the + or – buttons. The setting of 1 provides a small amount of pressure relief, with higher numbers providing additional relief. Press the + or – buttons to increase or decrease the setting.

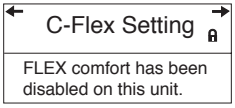


– If your provider has disabled C-Flex, you cannot enable or adjust the setting. The screen shown at left displays to indicate that C-Flex is disabled.

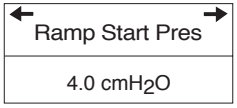


**3. Ramp Starting Pressure Screen**

You can increase or decrease the ramp starting pressure in 0.5 cm $H_2O$ increments by pressing the + or – buttons. The default setting is 4 cm $H_2O$. You can adjust the setting from 4 cm $H_2O$ to the CPAP pressure setting.

***Note:*** *This screen will not display if your provider has not enabled Ramp on your device.*

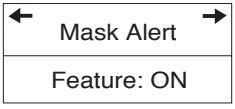


**4. Mask Alert Screen**

You can enable or disable the mask alert setting by pressing the + or – buttons to select OFF or ON. If this feature is enabled, then the words **Mask Leak** appear on the Active display screen if a significant mask leak is detected, and an audible alert sounds.

***Note:*** *If your physician indicates that the Mask Alert is necessary for you, do not disable it.*

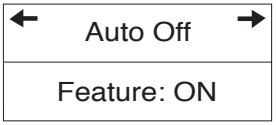


**5. Auto Off Screen**

You can enable this feature if you want the device to automatically turn the airflow off whenever you remove the interface (e.g., mask) from your airway.

Press the + or – buttons to select OFF or ON. If this feature is enabled, then the words **Auto Off** appear on the Standby screen if the device detects that you have removed your mask. The airflow shuts off, and the **Auto Off** message continues to appear on the Standby screen until the condition is corrected.

After you have finished modifying the Patient Setup screens, press the ⏻ button to return to the Standby screen.

***Note:*** *The Setup menu automatically times out and returns to the Standby screen after one minute of inactivity.*

## 4.4 Completing the FOSQ Questionnaire

***Note:*** *The FOSQ option only appears on the Standby screen if you have a SmartCard inserted or a modem connected to the device.*

From the Standby screen, you can access the FOSQ questionnaire by pressing the – button. The FOSQ test is a 'quality of life' questionnaire designed specifically for people with sleep disorders. The results allow health care professionals to see how therapy has improved the quality of your life. By completing the questionnaire periodically, you can provide valuable information about the effectiveness of your treatment. The device can record your answers on the SmartCard or via a wired or wireless modem for later review by the health care professional. Contact your home care provider for further instructions.

***Note:*** *If your health care professional or home care provider instructs you to complete the questionnaire, he or she will provide you with the questions, and you can enter your answers into the device. Make sure a SmartCard or modem is installed before answering the questions. The FOSQ screens will not display if a SmartCard or modem is not present and able to store data.*

To answer the FOSQ questionnaire, complete the following steps:

1. Make sure that the SmartCard or modem is properly installed. Answers to the questionnaire are saved onto the SmartCard or sent to the health care professional via a wired or wireless modem (when available). If you are using a SmartCard, a SmartCard symbol ( ) appears in the upper right corner of the Active Display screen. If the SmartCard is inserted incorrectly, this symbol flashes to indicate that the card is incorrectly installed, and the FOSQ questionnaire will not be available.
2. From the Standby screen, press the – button to access the first FOSQ screen, shown in Figure 4–8.

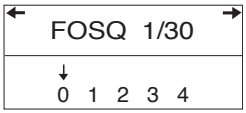


**Figure 4–8 FOSQ Screen 1 of 30**

Press the + or – button to select your answer to the first question, and an arrow appears over your answer:

- 0 indicates that you choose 0 as the answer to the question.
- 1 indicates that you choose 1 as the answer to the question.
- 2 indicates that you choose 2 as the answer.
- 3 indicates that you choose 3 as the answer.
- 4 indicates that you choose 4 as the answer.

3. After you answer the first question, press the → button to access the next FOSQ screen and continue answering each question. If you need to go back to a previous screen, press the ← button.
4. There are 30 FOSQ questions. Once you have reached the last question, press the → button to save your answers and exit the questionnaire.

## 4.5 Patient Reminder Screen

Your home care provider may set a patient reminder that will appear periodically to alert you to take certain actions, such as replacing your mask. A message will appear whenever the device transitions from the Active Display to the Standby state if the period of time specified by your provider has expired.

You can acknowledge the message by pressing any of the display buttons (+, –, → or ←). If you do not acknowledge the message within six minutes of it appearing on the screen, it will time out and disappear. The message will continue to display for three consecutive days whenever the device transitions from Active to Standby until it is acknowledged. If, after three days, you still have not acknowledged the message, then the reminder period will reset and no more reminders will display until the next time the patient reminder setting expires.

Figure 4–9 shows an example of a patient reminder message.

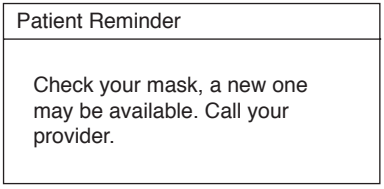


**Figure 4–9 Patient Reminder Screen**

# Chapter 5: Device Alerts and Troubleshooting

This chapter describes the device alerts and also provides troubleshooting information for issues you may run into when using the device.

## 5.1 Device Alerts

The device provides two alert levels, high and medium priority.

- **High Priority** – These alerts require immediate operator response. The alert signal consists of a high priority sound, which is a continuous two-beep pattern (indicated in the following table as: • • • •). Additionally, the backlights on the buttons will provide a high priority flashing pattern consisting of a continuous, bright-to-off, two-flash pattern (indicated in the following table as: ◊◊ ◊◊ ◊◊).
- **Medium Priority** – These alerts require prompt operator response. The alert signal consists of a medium priority sound, which is a continuous one-beep pattern (indicated in the following table as: • •). Additionally, the backlights on the buttons will provide a medium priority flashing pattern consisting of a continuous, bright-to-dim, one-flash pattern (indicated in the following table as: ◊ ◊ ◊).

## Alert Summary Table

The following table summarizes the high and medium priority alerts.

| Alert | Audible Indicator | Visual Indicator | Device Action | Possible Cause | Patient Action |
|---|---|---|---|---|---|
| System Error | • • • • | Backlights: ◊◊ ◊◊ ◊◊<br>Screen displays the following symbol, indicating that service is required: ⚠ | The device enters the "Safe state" in which the device power remains on, but the airflow is disabled. | Device failure | Press any of the display screen buttons to silence the alert. Remove the power supply cord from the device to remove power. Plug the cord back into the device's power inlet to restore power. If the alert continues to occur, contact your home care provider. |
| SmartCard Error | • • | Backlights: ◊ ◊ ◊<br>Screen displays the following flashing error symbol: | The device continues to operate and provide therapy, but data logging is unavailable and FOSQ is deactivated. | A problem exists with the SmartCard inserted in the accessory slot. The card may be improperly inserted or the data may be corrupt. | Remove the SmartCard to clear the alert. Confirm that the card is properly oriented, with the arrow pointing towards the device, as shown below, and reinsert the SmartCard. 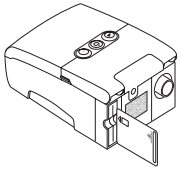 If the alert continues to occur, remove the SmartCard from the device and contact your home care provider. The card may be corrupt and need to be replaced. |

| Alert | Audible Indicator | Visual Indicator | Device Action | Possible Cause | Patient Action |
|---|---|---|---|---|---|
| Mask Leak | • • | Backlights:<br>◊ ◊ ◊<br><br>The words **Mask Leak** flash on the Active Display screen. | The device continues to operate. | The breathing circuit is disconnected or there is a large air leak. | Check your breathing circuit connections and reconnect the tubing if it has come loose. Press any of the display buttons to clear the alarm. Make sure your mask is on properly before you press the ⏻ button to restart the airflow.<br><br>If the alert continues to occur, disable the mask alert setting following the instructions in Chapter 4, and continue your therapy overnight. Contact your home care provider the next morning to have your mask checked. You may need a mask refitting. |
| Auto Off | None | The words **Auto Off** flash on the Standby screen, indicating that a mask disconnect has been detected. | The airflow shuts off and the device enters the Standby state approximately 45-60 seconds after detection. | The mask has been removed. | Put your mask back on and press the ⏻ button to turn the airflow on and resume therapy. |
| Patient Reminder | None | Backlights:<br>◊ ◊ ◊<br><br>Screen displays a customized reminder message whenever the device transitions from the Active state to the Standby state. | The device continues to operate. | Your home care provider may set a patient reminder scheduled to pop up at a particular time to remind you to replace your mask, change your filters, etc. | Press any of the display buttons to acknowledge the message and clear it. If you do not acknowledge the reminder, it will disappear after 6 minutes, and then reappear for three consecutive days whenever the device transitions from the Active state to the Standby state. If you still do not acknowledge the message, the reminder period will reset and the message will not reappear until the next time the Patient Reminder setting expires. |

## 5.2 Troubleshooting

The table below lists some of the problems you may experience with your device or mask and possible solutions to those problems.

| Problem | Why It Happened | What to Do |
|---|---|---|
| Nothing happens when you apply power to the device. The audible indicator does not sound and the backlights on the buttons do not light. | There's no power at the outlet or the device is unplugged. | If you are using AC power, check the outlet power and verify that the device is properly plugged in. Make sure the AC power cord is connected correctly to the power supply and the power supply cord is securely connected to the device's power inlet. If the problem continues to occur, contact your home care provider. Return both the device and power supply to your provider, so they can determine if the problem is with the device or power supply.<br><br>If you are using DC power, make sure your DC power cord and battery adaptor cable connections are secure. Check your battery. It may need recharged or replaced. If the problem persists, check the DC cord's fuse following the instructions supplied with your DC cord. The fuse may need to be replaced. If the problem still occurs, contact your home care provider.<br><br>If you are using a humidifier, make sure you follow the instructions for applying power that are provided with your humidifier. |
| The device does not operate when you press the ⏻ button. The airflow does not turn on. | There may be a problem with the blower. | Make sure the device is powered correctly, following the instructions on the previous page. If the audible indicator sounds and the button backlights turn on when you apply power, but the airflow does not turn on, there may be a problem with your device. Contact your home care provider for assistance.<br><br>***Note:*** *When the device is functioning correctly, after you press the ⏻ button, the device beeps and the airflow turns on after a slight delay. This brief delay is normal.* |

| Problem | Why It Happened | What to Do |
|---|---|---|
| The device's display is erratic. | The device or power supply has been dropped or mishandled, or the device or power supply is in an area with high Electromagnetic Interference (EMI) emissions. | Unplug the device and the power supply. Reapply power to the device. If the problem continues, relocate the device to an area with lower EMI emissions (e.g., away from electronic equipment such as cellular phones, cordless phones, computers, TVs, electronic games, hair dryers, etc.).<br><br>If the problem still occurs, contact your home care provider for assistance. |
| Device Resets/Reboots:<br><br>The device shuts down and restarts automatically during therapy. (This is unlikely to occur.) | The device comes installed with troubleshooting software that automatically monitors performance. | Such a reset poses no danger to the patient and assures that the patient receives prescribed therapy throughout the night. If there is a possibility of damage to the device, the device will shut down permanently. The product will then display the following system error alert symbol to indicate that the device be returned to the home care provider for service:<br><br> |
| The Ramp feature does not work when you press the Ramp button (⧄). | Your home care provider did not prescribe Ramp for you, or your CPAP pressure is already set to the minimum setting. | If Ramp has not been prescribed for you, discuss this feature with your home care provider to see if they will change your prescription.<br><br>If your provider has enabled Ramp, but the feature still does not work, check the CPAP setting on your Active Display screen. If CPAP is set to the minimum setting (4.0 cm $H_2O$), the Ramp feature will not work. |

| Problem | Why It Happened | What to Do |
|---|---|---|
| The device has fallen off your table or nightstand. | The device may not have been properly seated on the nightstand, or the placement of the tubing may have caused the device to fall. | Always make sure your device is placed on a hard, flat surface so the feet on the bottom of the device can adhere to the surface (make sure there is no fabric under the device). The device (and humidifier, if using) must be level for proper operation.<br><br>Also, place the device away from the edge of the nightstand or table, so it doesn't accidentally get knocked off the table.<br><br>If you are using a humidifier with the device, make sure that the device and humidifier are placed below your head and mask, so that any condensation in the tubing drains back into the water chamber.<br><br>If the device and humidifier fall and water gets into the device, drain all water out of the device and make sure it is completely dry before reapplying power.<br><br>If the placement of the tubing causes the device to fall, make sure that you use proper hose management when setting up your device. Route the tubing behind the bed's headboard, as shown in Chapter 3, Setup.<br><br>If the device falls or water gets into the device upon falling, let the device dry completely before restarting it. If the device does not operate correctly after falling, contact your home care provider. |

| Problem | Why It Happened | What to Do |
|---|---|---|
| You are having problems connecting the tubing to the device. | You have lost the air outlet port or are traveling and forgot to bring the port with you. | If you are not using a humidifier, you cannot connect your tubing to the device without the detachable air outlet port, shown below.<br> 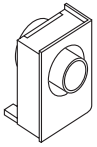 <br>You must have the port attached properly before connecting your tubing. |
| You are experiencing excessive air leaks where the tubing connects to the device. | The air outlet port is not installed correctly and doesn't seal properly. | Remove the port and reattach it to make sure it's properly installed.<br><br>To remove the port:<br>a. Put your thumb underneath the port and insert your index finger into the port opening.<br>b. Pivoting from the bottom, unsnap the port and pull it away from the device.<br><br>To properly reattach the port:<br>a. Make sure it is correctly oriented (with the port opening at the top), and insert the two latches at the bottom of the port into the openings on the bottom of the device.<br>b. Push the top of the port down to snap it into place.<br><br>Reattach your tubing, turn on the airflow, and check to make sure you do not still feel air coming out of the port area. |

| Problem | Why It Happened | What to Do |
|---|---|---|
| The air out of the mask is much warmer than usual. | The air filters may be dirty.<br><br>The device may be operating in direct sunlight or near a heater. | Clean or replace the air filters as described in Chapter 7.<br><br>The temperature of the air may vary somewhat based on your room temperature. Make sure that the device is properly ventilated. Keep the device away from bedding or curtains that could block the flow of air around the device. Make sure the device is away from direct sunlight and heating equipment.<br><br>If the problem continues, contact your home care provider. |
| The mask feels uncomfortable to wear, there is significant air leakage around the mask, or you experience other mask-related issues. | This could be due to improper headgear adjustment or improper mask fitting, etc. | If you experience any issues with your mask, refer to your mask instructions for information on proper fitting, etc. If the problem continues, contact your home care provider. |
| You have a runny nose. | This is caused by a nasal reaction to the airflow. | Call your health care professional. |
| You have throat or nose dryness. | The air is too dry. | Increase the room humidity. Consult with your health care professional about using a Respironics humidifier with the device. If you have a humidifier, refer to the instructions included with your humidifier to make sure it is working properly. |
| You experience nasal, sinus, or ear pain. | You may have a sinus or middle ear infection. | Stop using the device and contact your health care professional. |

# CHAPTER 6: ACCESSORIES

Contact your home care provider for additional information on the accessories available for your REMstar Pro M Series system. When using optional accessories, always follow the instructions enclosed with the accessories.

## 6.1 ADDING A HUMIDIFIER

You can use the M Series Heated humidifier or the M Series Pass-over humidifier with your device. They are available from your home care provider. A humidifier may reduce nasal dryness and irritation by adding moisture (and heat, if applicable) to the airflow. Figure 6–1 shows the humidifier by itself and attached to the REMstar Pro M Series device.

***Caution:*** *For safe operation, the humidifier must always be positioned below the breathing circuit connection at the mask and the air outlet on the device. The humidifier must be level for proper operation.*

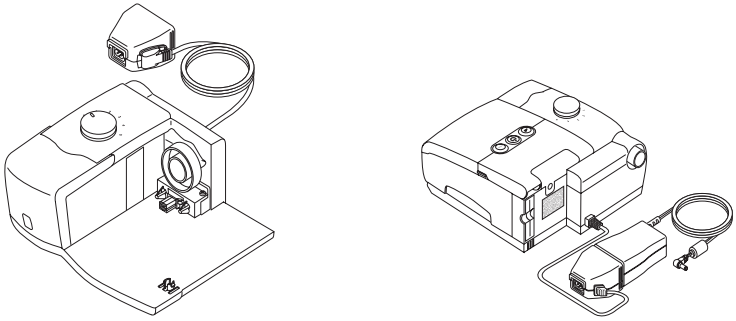

Humidifer without Device

Humidifer Device Attached

**FIGURE 6–1 HUMIDIFIER ALONE AND ATTACHED TO THE DEVICE**

Refer to the humidifier's instructions for complete setup information.

## 6.2 Using the SmartCard

Some REMstar Pro M Series systems come with a SmartCard accessory module installed in the accessory slot on the back of the device to record information for the home care provider. Your home care provider may ask you to periodically remove the SmartCard and send it to him/her for evaluation.

***Note:*** *The SmartCard does not need to be installed for the device to work properly. The SmartCard records device usage information for use by your home care provider. Contact your provider if you have any questions about the SmartCard.*

## 6.3 Adding Supplemental Oxygen

Oxygen may be added at the mask connection. Please note the warnings listed below when using oxygen with the device.

### Warnings

- When using oxygen with this system, the oxygen supply must comply with local regulations for medical oxygen.
- When using oxygen with this system, a Respironics Pressure Valve (Part number 302418) must be placed in-line with the patient circuit. Failure to use the pressure valve could result in a fire hazard.
- Oxygen accelerates fires. Keep the device and the oxygen container away from heat, open flames, any oily substance, or other sources of ignition. Do not smoke in the area near the device or the oxygen.
- When using oxygen with this system, turn the device on before turning on the oxygen. Turn the oxygen off before turning the device off. This will prevent oxygen accumulation in the device.
- If administering fixed-flow supplemental oxygen, the oxygen concentration may not be constant. The inspired oxygen concentration will vary, depending on the CPAP setting, patient breathing pattern, and leak rate. Substantial leaks around the mask may reduce the inspired oxygen concentration to less than the expected concentrations. Appropriate patient monitoring should be implemented.

# Chapter 7: Cleaning and Maintenance

This chapter describes how to clean the device and its filters and provides tips on traveling with your REMstar Pro M Series system.

## 7.1 Cleaning the Device

***Warning:*** *To avoid electrical shock, always unplug the power cord from the wall outlet or DC power source before cleaning the device.*

***Caution:*** *Do not immerse the device in liquid or allow any liquid to enter the enclosure, inlet filter, or any opening.*

1. Unplug the device, and wipe the outside of the device with a cloth slightly dampened with water and a mild detergent. Let the device dry completely before plugging in the power cord.
2. Inspect the device and all circuit parts for damage after cleaning. Replace any damaged parts.

## 7.2 Cleaning or Replacing the Filters

***Caution:*** *Operating the device with a dirty filter may keep the system from working properly and may damage the device.*

Under normal usage, you should clean the gray foam filter at least once every two weeks and replace it with a new one every six months. The white ultra-fine filter is disposable and should be replaced after 30 nights of use or sooner if it appears dirty. DO NOT clean the ultra-fine filter.

***Caution:*** *Dirty inlet filters may cause high operating temperatures that may affect device performance. Regularly examine the inlet filters as needed for integrity and cleanliness.*

1. If the device is operating, stop the airflow by pressing the ⏻ button. Disconnect the device from the power source.
2. Remove the filter(s) from the enclosure by gently squeezing the filter in the center and pulling it away from the device, as shown in Figure 7–1.

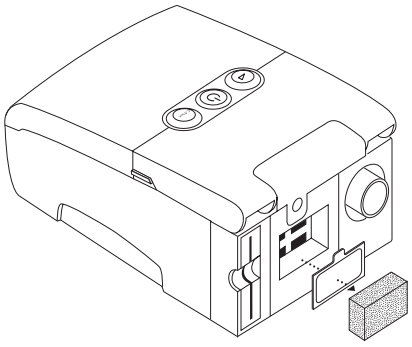

**FIGURE 7–1 REMOVING THE FILTERS**

3. Examine the filter(s) for cleanliness and integrity.
4. Wash the gray foam filter in warm water with a mild detergent. Rinse thoroughly to remove all detergent residue. Allow the filter to air dry completely before reinstalling it. If the foam filter is torn, replace it. (Only Respironics-supplied filters should be used as replacement filters.)
5. If the white ultra-fine filter is dirty or torn, replace it.
6. Reinstall the filters, inserting the white ultra-fine filter first if applicable, as shown in Figure 7–2.

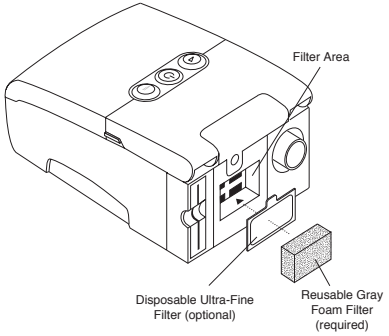


**FIGURE 7–2 REINSTALLING THE FILTERS**

***Caution:*** *Never install a wet filter into the device. It is recommended that you clean the filter in the morning and alternate using the two foam filters provided with the system to ensure sufficient drying time for the cleaned filter.*

## 7.3 Cleaning the Tubing

Clean the tubing daily. Disconnect the flexible tubing from the device. Gently wash the tubing in a solution of warm water and a mild detergent. Rinse thoroughly. Air dry.

## 7.4 Service

The REMstar Pro M Series device does not require routine servicing.

***Warning:*** *If you notice unexplained changes in the performance of this device, if it is making unusual or harsh sounds, if the device or power supply have been dropped or mishandled, if the enclosure is broken, or if water has entered the device, discontinue use, and contact your home care provider.*

## 7.5 Traveling with the System

When traveling, the carrying case is for carry-on luggage only. The carrying case will not protect the system if it is put through checked baggage.

For your convenience at security stations, there is a note on the bottom of the device stating that it is medical equipment. It may be helpful to bring this manual along with you to help security personnel understand the REMstar Pro M Series device.

If you typically use a humidifier with your device, but leave the humidifier home when traveling, make sure you attach the air outlet port to your M Series device when you remove the humidifier from the device. You need the port to connect the tubing directly to your device. Figure 7–3 illustrates how to remove the humidifier from the device and attach the air outlet port.

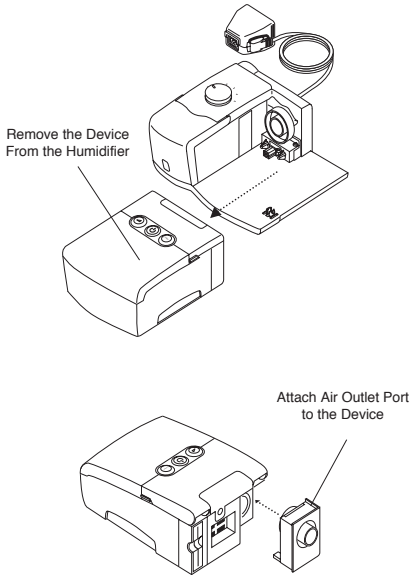


**Figure 7–3 Attaching the Air Outlet Port to the Device**

### 7.5.1 International Travel

If you are traveling to a country with a line voltage different than the one you are currently using, a different power cord or an international plug adaptor may be required to make your power cord compatible with the power outlets of the country to which you are traveling. Contact your home care provider for additional information.

# Chapter 8: Specifications

## Environmental

| | Operating | Storage |
|---|---|---|
| Temperature | 5° C (41° F) to 35° C (95° F) | -20° C (-4° F) to 60° C (140° F) |
| Relative Humidity | 15 to 95% (non-condensing) | 15 to 95% (non-condensing) |
| Atmospheric Pressure | 77 to 101kPa (0 - 7500 ft) | N/A |

## Physical

Dimensions: 7.5” L x 5.0” W x 3.125” H (19 x 12.7 x 7.9 cm)

Weight: Approximately 2.2 lbs. (without a humidifier)

## Standards Compliance

This device is designed to conform to the following standards:

– IEC 60601-1 General Requirements for Safety of Medical Electrical Equipment

– EN ISO 17510-1 Sleep Apnea Breathing Therapy Devices

## Electrical

AC Power Consumption: 100 – 240 VAC, 50/60 Hz, 1.0 A max.

DC Power Consumption: 12 VDC, 3.0 A max.

Type of Protection Against Electric Shock: Class II Equipment

Degree of Protection Against Electric Shock: Type BF Applied Part

Degree of Protection against Ingress of Water: Device: Drip Proof, IPX1

AC Power Supply: (Reorder number 1015642): Drip Proof, IPX1

Mode of Operation: Continuous

Electromagnetic Compatibility: The device meets the requirements of EN 60601-1-2, 2nd edition.

Fuses: There are no user-replaceable fuses.

## Pressure

**Pressure Increments:** 4.0 to 20.0 cm $H_2O$ (in 0.5 cm $H_2O$ increments)

**Pressure Stability:**
<10.0 cm $H_2O$ (±0.5 cm $H_2O$)
≥10.0 to 20.0 cm $H_2O$ (±1.0 cm $H_2O$)
Measured in accordance with EN ISO 17510-1 @ 1/3, 2/3, and Pmax with BPM set to 10, 15, and 20 BPM @ 20° C (±5° C), 50% RH (±5%), and an atmospheric pressure of 101.54 kPascals.

**Maximum Flow:** 35 LPM

Measured in accordance with EN ISO 17510-1 @ 1/3, 2/3, and Pmax with BPM set to 10, 15, and 20 BPM @ 23° C (±2° C), 50% RH (±5%), and an atmospheric pressure of 101.54 kPascals.

## Disposal

Dispose of the device in accordance with local regulations.

# Appendix A: EMC Information

## Guidance and Manufacturer's Declaration - Electromagnetic Emissions

This device is intended for use in the electromagnetic environment specified below. The user of this device should make sure it is used in such an environment.

| Emissions Test | Compliance | Electromagnetic Environment - Guidance |
|---|---|---|
| RF emissions<br>CISPR 11 | Group 1 | The device uses RF energy only for its internal function. Therefore, its RF emissions are very low and are not likely to cause any interference in nearby electronic equipment. |
| RF emissions<br>CISPR 11 | Class B | The device is suitable for use in all establishments, including domestic establishments and those directly connected to the public low-voltage power supply network. |
| Harmonic emissions<br>IEC 61000-3-2 | Class A | |
| Voltage fluctuations/Flicker emissions<br>IEC 61000-3-3 | Complies | |

## Guidance and Manufacturer's Declaration - Electromagnetic Immunity

This device is intended for use in the electromagnetic environment specified below. The user of this device should make sure it is used in such an environment.

| Immunity Test | IEC 60601 Test Level | Compliance Level | Electromagnetic Environment - Guidance |
|---|---|---|---|
| Electrostatic Discharge (ESD)<br><br>IEC 61000-4-2 | ± 6 kV contact<br><br>± 8 kV air | ± 6 kV contact<br><br>± 8 kV air | Floors should be wood, concrete or ceramic tile. If floors are covered with synthetic material, the relative humidity should be at least 30%. |
| Electrical fast Transient/burst<br><br>IEC 61000-4-4 | ± 2 kV for power supply lines<br><br>± 1 kV for input-output lines | ± 2 kV for supply mains<br><br>± 1 kV for input/output lines | Mains power quality should be that of a typical home or hospital environment. |
| Surge<br>IEC 61000-4-5 | ± 1 kV differential mode<br><br>± 2 kV common mode | ± 1 kV differential mode<br><br>± 2 kV for common mode | Mains power quality should be that of a typical home or hospital environment. |
| Voltage dips, short interruptions and voltage variations on power supply input lines<br><br>IEC 61000-4-11 | <5% $U_T$ (>95% dip in $U_T$) for 0.5 cycle<br>40% $U_T$ (60% dip in $U_T$) for 5 cycles<br>70% $U_T$ (30% dip in $U_T$) for 25 cycles<br><5% $U_T$ (>95% dip in $U_T$) for 5 sec | <5% $U_T$ (>95% dip in $U_T$) for 0.5 cycle<br>40% $U_T$ (60% dip in $U_T$) for 5 cycles<br>70% $U_T$ (30% dip in $U_T$) for 25 cycles<br><5% $U_T$ (>95% dip in $U_T$) for 5 sec | Mains power quality should be that of a typical home or hospital environment. If the user of the device requires continued operation during power mains interruptions, it is recommended that the device be powered from an uninterruptible power supply or a battery. |
| NOTE: $U_T$ is the a.c. mains voltage prior to application of the test level. | | | |

## Guidance and Manufacturer's Declaration - Electromagnetic Immunity

This device is intended for use in the electromagnetic environment specified below. The user of this device should make sure it is used in such an environment.

| Immunity Test | IEC 60601 Test Level | Compliance Level | Electromagnetic Environment - Guidance |
|---|---|---|---|
| Power frequency (50/60 Hz) magnetic field<br><br>IEC 61000-4-8 | 3 A/m | 3 A/m | Power frequency magnetic fields should be at levels characteristic of a typical location in a typical hospital or home environment. |
| Conducted RF<br>IEC 61000-4-6<br><br>Radiated RF<br>IEC 61000-4-3 | 3 Vrms<br>150 kHz to 80 MHz<br><br>3 V/m<br>80 MHz to 2.5 GHz | 3 Vrms<br><br>3 V/m | Portable and mobile RF communications equipment should be used no closer to any part of the device, including cables, than the recommended separation distance calculated from the equation applicable to the frequency of the transmitter.<br><br>Recommended separation distance<br>$d = 1.2\sqrt{P}$<br><br>$d = 1.2\sqrt{P}$ 80 MHz to 800 MHz<br>$d = 2.3\sqrt{P}$ 800 MHz to 2.5 GHz<br><br>where P is the maximum output power rating of the transmitter in watts (W) according to the transmitter manufacturer and d is the recommended separation distance in meters (m).<br><br>Field strengths from fixed RF transmitters, as determined by an electromagnetic site survey[a], should be less than the compliance level in each frequency range.[b]<br><br>Interference may occur in the vicinity of equipment marked with the following symbol: |

NOTE 1 At 80 MHz and 800 MHz, the higher frequency range applies.

NOTE 2 These guidelines may not apply in all situations. Electromagnetic propagation is affected by absorption and reflection from structures, objects, and people.

a Field strengths from fixed transmitters, such as base stations for radio (cellular/cordless) telephones and land mobile radios, amateur radio, AM and FM radio broadcast and TV broadcast cannot be predicted theoretically with accuracy. To assess the electromagnetic environment due to fixed RF transmitters, an electromagnetic site survey should be considered. If the measured field strength in the location in which the device is used exceeds the applicable RF compliance level above, the device should be observed to verify normal operation. If abnormal performance is observed, additional measures may be necessary, such as re-orienting or relocating the device.

b Over the frequency range 150 kHz to 80 MHz, the field strengths should be less than 3 V/m.

## Recommended Separation Distances between Portable and Mobile RF Communications Equipment and This Device

The device is intended for use in an electromagnetic environment in which radiated RF disturbances are controlled. The customer or the user of this device can help prevent electromagnetic interference by maintaining a minimum distance between portable and mobile RF communications equipment (transmitters) and this device as recommended below, according to the maximum output power of the communications equipment.

| Rated Maximum Power Output of Transmitter W | Separation Distance According to Frequency of Transmitter m | | |
|---|---|---|---|
| | 150 kHz to 80 MHz $d = 1.2\sqrt{P}$ | 80 MHz to 800 MHz $d = 1.2\sqrt{P}$ | 800 MHz to 2.5 GHz $d = 2.3\sqrt{P}$ |
| 0.01 | 0.12 | 0.12 | 0.23 |
| 0.1 | 0.38 | 0.38 | 0.73 |
| 1 | 1.2 | 1.2 | 2.3 |
| 10 | 3.8 | 3.8 | 7.3 |
| 100 | 12 | 12 | 23 |

For transmitters rated at a maximum output power not listed above, the recommended separation distance *d* in meters (m) can be estimated using the equation applicable to the frequency of the transmitter, where P is the maximum output power rating of the transmitter in watts (W) according to the transmitter manufacturer.

Note 1: At 80 MHz and 800 MHz, the separation distance for the higher frequency range applies.

Note 2: These guidelines may not apply in all situations. Electromagnetic propagation is affected by absorption and reflection from structures, objects, and people.

# Limited Warranty

Respironics, Inc. warrants that the system shall be free from defects of workmanship and materials and will perform in accordance with the product specifications for a period of two (2) years from the date of sale by Respironics, Inc. to the dealer. If the product fails to perform in accordance with the product specifications, Respironics, Inc. will repair or replace – at its option – the defective material or part. Respironics, Inc. will pay customary freight charges from Respironics, Inc. to the dealer location only. This warranty does not cover damage caused by accident, misuse, abuse, alteration, and other defects not related to material or workmanship.

Respironics, Inc. disclaims all liability for economic loss, loss of profits, overhead, or consequential damages which may be claimed to arise from any sale or use of this product. Some states do not allow the exclusion or limitation of incidental or consequential damages, so the above limitation or exclusion may not apply to you.

This warranty is given in lieu of all other express warranties. In addition, any implied warranties – including any warranty of merchantability or fitness for the particular purpose – are limited to two years. Some states do not allow limitations on how long an implied warranty lasts, so the above limitation may not apply to you. This warranty gives you specific legal rights, and you may also have other rights which vary from state to state.

To exercise your rights under this warranty, contact your local authorized Respironics, Inc. dealer or contact Respironics, Inc. at:

1001 Murry Ridge Lane

Murrysville, Pennsylvania 15668-8550

1-724-387-4000